SIN AMP

Rev.3.Feb.27.2007

Build a Sans Amp GT2 circuit. You'll need to match the offboard wiring pads for the switches to the pinout of the actual switch you'll be using. Off board components except for the potentiometers are not shown on the layout. Trademarks remain property of their owners. Visit www.tonepad.com for more!

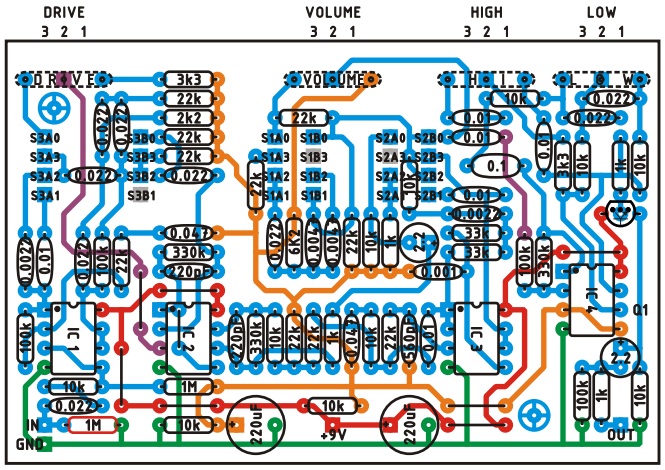

LAYOUT

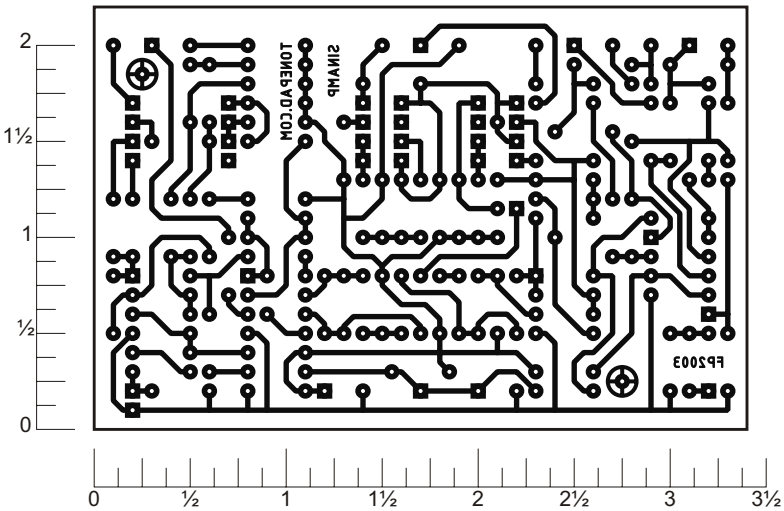

READY TO TRANSFER

Parts List

Resistors
- 4 - 1k
- 1 - 2k2
- 2 - 3k3
- 1 - 6k2
- 11 - 10k
- 10 - 22k
- 2 - 33k
- 4 - 100k
- 3 - 330k
- 2 - 1M

Capacitors
- 9 - 0.022 µF
- 2 - 0.047 µF
- 2 - 0.0047 µF
- 6 - 0.01 µF
- 1 - 0.1 µF
- 2 - 220 µF
- 1 - 560 pF
- 2 - 220 pF
- 2 - 2.2 µF
- 2 - 0.0022 µF
- 1 - 0.001 µF

Pots
- 4 - 100k Lin.

Transistors &ICs
- 4 - TL072 (or other dual opamp)
- 1 - 2N5088

Switch Settings

S1 = MIC	S2 = MOD	S3 = AMP
1 - Off Axis	1 - Hot Wired	1 - California
2 - Center	2 - Hi Gain	2 - British
3 - Classic	3 - Clean	3 - Tweed

Switch Wiring Example

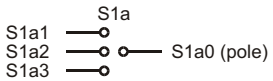

Layout and presentation by Francisco Peña 2001 - 2007®.
All rights reserved. Authorization for personal use only,
any commercial use is forbidden.
Permission for posting/serving limited to
http://www.tonepad.com
Permission refused for posting from other sites.
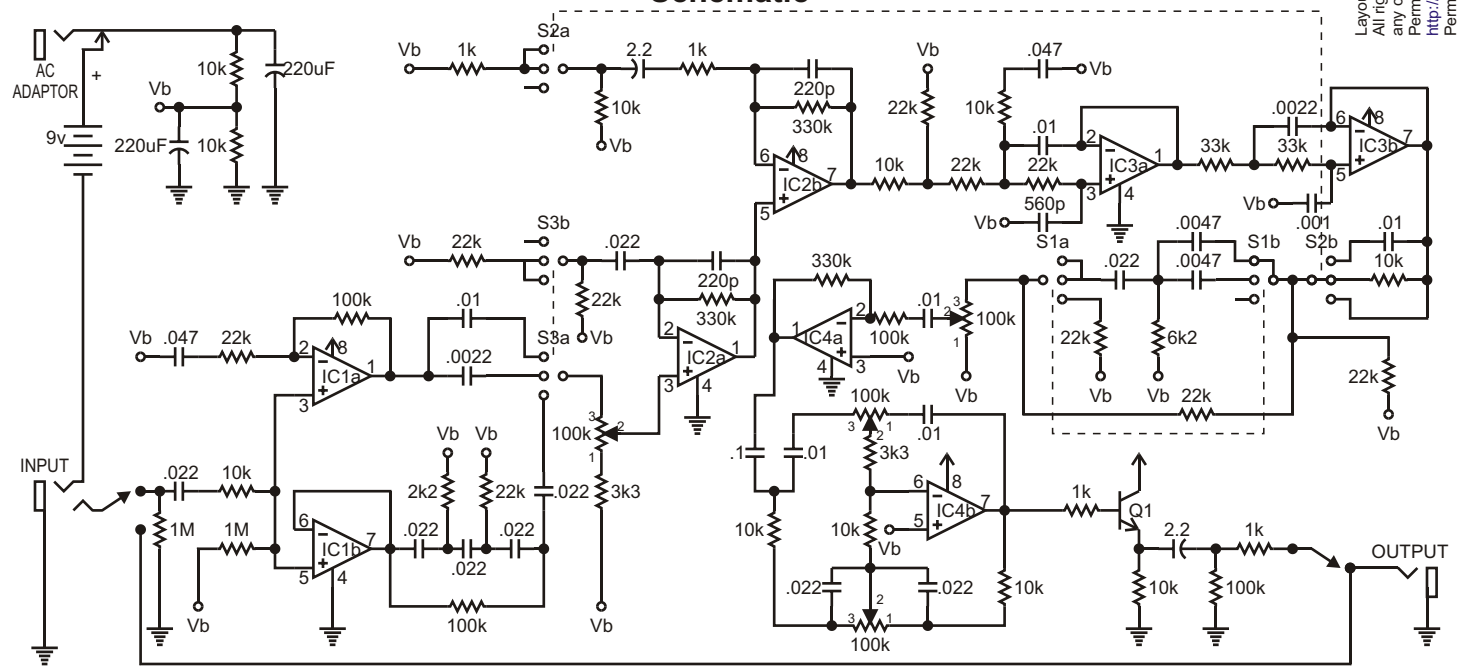
Schematic